DATA SHEET

Video sensor VGAsens

Video sensor

REF

007-0-233

SET

1. Video sensor VGAsens,
2. Ring retainer.

DESCRIPTION

VGAsens is a photometric discrete light level sensor with digital TTL compatible[1] open collector output, pluggable analog voltage integrator and adjustable sensitivity range.

VGAsens is intended for use as part of systems that require synchronization of the image presentation on the screen of an electron beam or liquid crystal active-matrix monitor with other data streams, for example, an electroencephalogram. It is recommended to use VGAsens with NVX series EEG amplifiers (MCS).

VGAsens allows you to detect the excess of the intensity threshold of the glow of a small area on the display (light spot) and changing the state of the TTL output to a high level. The state change is registered by an external device and used for synchronization with other data streams.

TRIGGER CHANNELS OF 3.5 STEREO PLUG

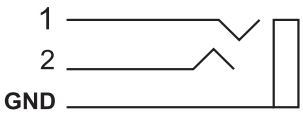

GND (Sleeve)	GND
1 (Ring)	Power
2 (Tip)	TTL-output

The default exit state can be changed by the application program.

[1]TTL (transistor-transistor logic) - specification of electrical interfaces of transistor-transistor digital logic.

SPECIFICATION

Minimal dimensions of «flash area»	5 x 5 mm
Intensity threshold *	3-300 Lux (adjustable)
Switching time, typical *	20-60 µs
Holding time, typical *	2.40 ms
Power	3-5 V, 25 µA from EEG amplifier
Connector type	3.5 stereo plug
Cable length	5.0 ±0.05 m
Dimensions (LxWxH)	35 x 35 x 16 ±0.5 mm
Net weight	< 100 g

* At rated supply voltage and temperature 25°C

ERP/ERP SET CONNECTION DIAGRAM

The doctor's computer must be equipped with two monitors. One monitor (doctor's monitor) displays the interface of Patient Data Repository, while the second monitor (patient monitor) displays visual stimuli.

Connect the set of equipment according to the figure.

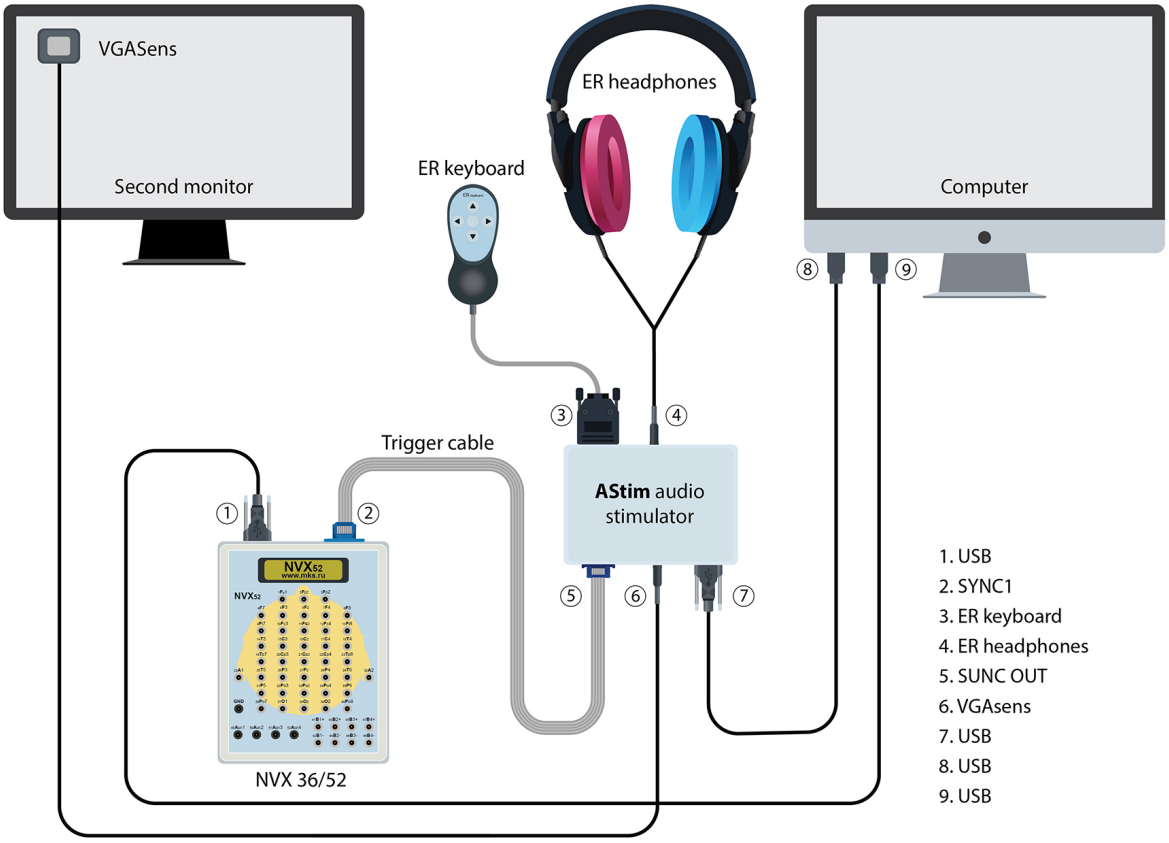

Fig.1 ERP/ERP set connection diagram